Specifications and technical data are subject to change without notice.
Please contact to confirm relevant information on ordering.

No.18, Gutang Rd, Shanghai 201209, China
+86 21 5032 0898
+86 21 5032 0828
info@ebasee.com
www.ebasee.com

MODULAR TERMINAL

Copy right reserved EBS.NO.2023001

EBASEE

Smart Living Green Ebasee

MODULAR TERMINAL

01 Verified Custom Manufacturer

02 Supplier Fortune 500 Companies

03 Registered Trademarks

COMPANY PROFILE

As a leading supplier in the low voltage electrical industry, Shanghai Ebasee Electric Co., Ltd. products have been used for residential, commercial and industrial applications. EBASEE brand is recognized for its quality and reliability in an ever-increasing number of markets worldwide. So far EBASEE products have been approved by international labs including BV, TUV, Intertek, with KEMA, CB, SEMKO, RoHS, CE, and CCC etc.

With qualified raw materials and components supply, all products are manufactured by EBASEE's defined international specifications. We have 4 semi-auto production lines, up-to-date quality control facilities, well-trained and experienced workers. Moreover, with a technical R & D team and fully equipped in-house laboratory, EBASEE factory can carry out efficient new products development, daily production and QC.

EBASEE have a wide range of cooperations with world leading companies in new products development, OEM and ODM cooperation. Meanwhile, we process the idea of green and smart energy, working with universities such as Xi'an Jiao Tong University to get more intelligent and environmental electric solutions.

EBASEE focused on achieving growth through the success of worldwide partners. Guided by the philosophy of "market-oriented", powered by the idea of "quick response and flexible supply", EBASEE support our worldwide partners to compete against established global players, to deliver the most systematic and cost-effective products and service in the market.

"Smart Living, Green EBASEE"

PRODUCTION LINE

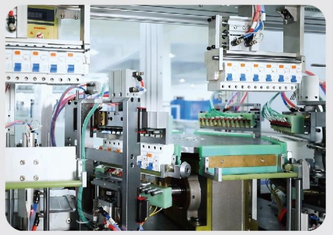

SMART LIVING GREEN EBASEE

QUALITY MANAGEMENT SYSTEM CERTIFICATE

Certificate No. 0012Q39188R2S/3100

We hereby certify that

Shanghai Ebasee Electric Co.,Ltd.

Registration Address: Building 1, No.512, Shangchuan Road, Pudong New District, Shanghai, China
Operation Address: Room 4228, 4F-A, No.18, Gutang Road, Pudong New District, Shanghai, China

by reason of its

Quality Management System

has been awarded this certificate for compliance with the standard

GB/T 19001-2016 / ISO 9001:2015

The Quality Management System Applies in the following area:

Productive Technology Management and Sales of Low Voltage Electric Products

Certified since: February 2, 2015 Valid from: November 9, 2020 Valid until: February 1, 2024

After a successful audit, the certificate is valid only when you register with an Accredited Notified Sanitarium Authorized by CQC. The validation and its relevant information can be found on the website of Certification and Accreditation Administration of the People's Republic of China (www.cnca.gov.cn).

CHINA QUALITY CERTIFICATION CENTRE

A 0089015

INTERNATION QUALITY CERTIFICATE

EBASEE products have been approved by international labs including BV, TUV, Intertek CQC, with KEMA, CB, SEMKO, RoHS, CE, and CCCs etc.

ATTESTATION
of conformity with European Directives

Product: MCB
Reference: BM8 Series
Issued to: Shanghai Ebasee Electric Co., Ltd.
Address: No.18 Gutang Road, Pudong, Shanghai 201209 P. R. China
Manufacturer: Shanghai Ebasee Electric Co., Ltd.
Technical characteristics: Type B,C and D
Ue=230V/415V ~ (1P); 415V ~ (2P,3P,3P+N,4P)
240V ~ (1P+N);
Ie=6;10;16;20A;25A;32A;40A;50A;63A
Icu=Icn1=10000A, Ics=7500A,
Energy limit class 3 according to EN 60898-1)
Ui=500V;Uimp=6kV
Grid distance: 35mm;Screw diameter of load terminal =4.5mm

The submitted sample of the above equipment has been rated for CE marking according to following European Directive and following standards:

Low Voltage Directive 2014/35/EU

Standards	Report number	Report date
EN 60898-1:2015 ~ A1:2004 + A11:2015 + A12:2008 + A13:2012	R180075	15/05/2019

The referenced standards or the product complies with standard(s) recognized as giving presumption of compliance with the essential requirements as the applied from this Directive.

It's a certificate issued for reply assessment of the production of the product. The CE marking may be affixed at the discretion of the manufacturer. The CE marking is valid only when affixed on European Economic Area (EEA) products.

Shanghai (P.R. China), 3. June 11th, 2019.

Charlie CHEN
Product Line Manager

CE

Information put in this document, is valid for the tested specimen of the electrical electronic systems.

LCIE China
上海电器设备检测所有限公司
第三分部
Version 2011.02.11

Reproduced, accepted in full, without the written approval of BV LCIE China.

Building 4, No. 508, Wu Zhong Road, Qiaoxing Industrial Park, Minhang District, Shanghai P.R.C. 201103

Tel: +86 21 2168 2280
Fax: +86 21 5 68 7281
Email: [illegible]

DEKRA

CERTIFICATE

Issued to:
Applicant: Shanghai Ebasee Electric Co., Ltd. No.18 Gutang Road, Pudong, Shanghai, 201209, China
Manufacturer/licensee: SASSIN INTERNATIONAL ELECTRIC SHANGHAI CO., LTD. NO. 2388, JINHAI ROAD, PUDONG, SHANGHAI, 201209, CHINA

Product(s) : Moulded-Case Circuit Breaker
Trade name(s) : EBASEE
Type(s)/model(s) : EBS(W)-200S, EBS(W)-250R

The product and any acceptable variation thereto is specified in the Annex to this certificate and the documents therein referred to.

DEKRA hereby declares that the above-mentioned product has been certified on the basis of:
– a type test according to the standard EN 60947-2:2006+ A1:2009; IEC 60947-2:2006 + A1:2009;
– an inspection of the production location according to CENELEC Operational Document OD 02;
– a certification agreement with the number 213454.

DEKRA hereby grants the right o use the KEMA-KEUR certification mark.

The KEMA-KEUR certification mark may be applied to the product as specified in this certificate for the duration of the KEMA-KEUR certification agreement and under the conditions of the KEMA-KEUR certification agreement.

This certificate is issued on: 21 March 2014 and expires upon withdrawal of one of the above mentioned standards.

Certificate number: 3306173.01

DEKRA Certification B.V.

drs. G.J. Zoetbrood
Managing Director

P.S. Strikwerda
Certification Manager

© Integral publication of this certificate is allowed

ACCREDITED BY THE DUTCH ACCREDITATION COUNCIL

KEMA KEUR

DEKRA Certification B.V. Meander 1051, 6825 MJ Arnhem P.O. Box 5185, 6802 ED Arnhem The Netherlands
T +31 88 96 83000 F +31 88 96 83100 www.dekra-certification.com Registered Arnhem 09085398

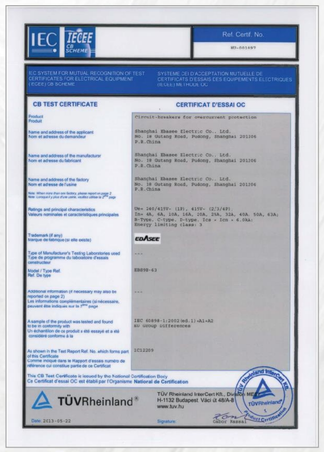
IEC IECEE CB SCHEME

Ref. Certif. No.
IR-003497

IEC SYSTEM FOR MUTUAL RECOGNITION OF TEST CERTIFICATES FOR ELECTRICAL EQUIPMENT (IECEE) CB SCHEME

SYSTEME (IE) D'ACCEPTATION MUTUELLE DE CERTIFICATS D'ESSAIS DES EQUIPEMENTS ELECTRIQUES (IECEE) METHODE CB

CB TEST CERTIFICATE — CERTIFICAT D'ESSAI CC

Product / Produit: Circuit-breaker for overcurrent protection

Name and address of the applicant / Nom et adresse du demandeur: Shanghai Ebasee Electric Co., Ltd. No.18 Gutang Road, Pudong, Shanghai 201206 P.R.China

Name and address of the manufacturer / Nom et adresse du fabricant: Shanghai Ebasee Electric Co., Ltd. No. 18 Gutang Road, Pudong, Shanghai 201206 P.R.China

Name and address of the factory / Nom et adresse de l'usine: Shanghai Ebasee Electric Co., Ltd. No.18 Gutang Road, Pudong, Shanghai 201206 P.R.China

Ratings and principal characteristics / Valeurs nominales et caractéristiques principales: 3N~ 240/415V~ (1P; 415V~ (2P,3P); 3N~ 6A, 10A, 16A, 20A, 25A, 32A, 40A, 50A, 63A; B-Type, C-Type, D-Type, Icu = Icn = 6.0kA; Energy limiting class 3

Trademark (if any) / Marque de fabrique (si elle existe): EBASEE

Type of Manufacturer's Testing Laboratories used / Type de programme du laboratoire d'essais constructeur: ---

Model / Type Ref. / Ref. De type: EBS9-63

Additional information (if necessary may also be reported on page 2) / Informations complémentaires (si nécessaire, peuvent être indiquées sur la 2ème page): ---

A sample of the product was tested and found to be in conformity with / Un échantillon de ce produit a été essayé et a été constaté conforme à la: IEC 60898-1:2002(ed.1)+A1+A2 Ac:2003 (otherwise IEC 60898-1:2015(ed.2))

As shown in the Test Report Ref. No. which forms part of this Certificate / Comme indiqué dans le Rapport d'essais numéro de référence qui constitue partie de ce Certificat: CTI2209 R180075

This CB Test Certificate is issued by the National Certification Body / Ce Certificat d'essai CC est délivré par l'Organisme National de Certification

TÜVRheinland®

TÜV Rheinland InterCert Kft., Dózsa György út 26, H-1132 Budapest, Vág u. 48/A-B, www.tuv.hu

Date: 2013-05-22 Signature: Laszlo Bakos

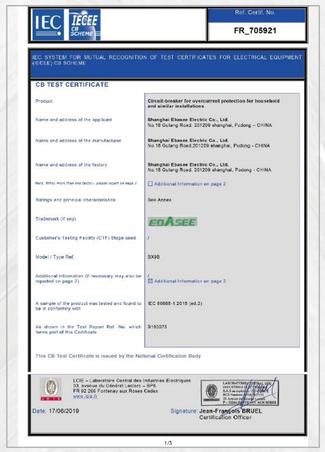
IEC IECEE CB SCHEME

Ref. Certif. No.
FR_705921

IEC- SYSTEM FOR MUTUAL RECOGNITION OF TEST CERTIFICATES FOR ELECTRICAL EQUIPMENT (IECEE) CB SCHEME

CB TEST CERTIFICATE

Product: Circuit-breaker for overcurrent protection for household and similar installations

Name and address of the applicant: Shanghai Ebasee Electric Co., Ltd. No.18 Gutang Road 201209 shanghai, Pudong – CHINA

Name and address of the manufacturer: Shanghai Ebasee Electric Co., Ltd. No.18 Gutang Road 201209 shanghai, Pudong – CHINA

Name and address of the factory: Shanghai Ebasee Electric Co., Ltd. No.18 Gutang Road 201209 shanghai, Pudong – CHINA

Note: When more than one factory, please report on page 2

☒ Additional Information on page 2

Ratings and principal characteristics: See Annex

Trademark (if any): EBASEE

Customer's Testing Facility (CTF) Stage used: /

Model / Type Ref.: SX80

Additional information (if necessary may also be reported on page 2): ☒ Additional Information on page 3

A sample of the product was tested and found to be in conformity with: IEC 60898-1:2015 (ed.2)

As shown in the Test Report Ref. No. which forms part of this Certificate: R180075

This CB Test Certificate is issued by the National Certification Body

LCIE – Laboratoire Central des Industries Electriques
33, avenue du Général Leclerc – BP8
FR 92 260 Fontenay aux Roses Cedex
www.lcie.fr

LABORATOIRE CENTRAL DES INDUSTRIES ELECTRIQUES
S.A. au capital de 1 524 490 €
RCS Nanterre B 408 363 808
N° Identification TVA FR 87 408 363 808
Siège social : 33, av. du Général Leclerc 92260 Fontenay-aux-Roses

Date: 17/06/2019

Signature: Jean-François GIRUEL
Certification Officer

1/5

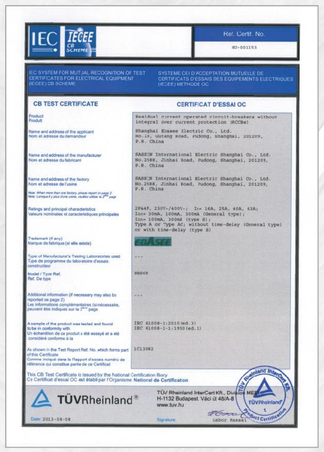
IEC IECEE CB SCHEME

Ref. Certif. No.
IR-003153

IEC SYSTEM FOR MUTUAL RECOGNITION OF TEST CERTIFICATES FOR ELECTRICAL EQUIPMENT (IECEE) CB SCHEME

SYSTEME CB D'ACCEPTATION MUTUELLE DE CERTIFICATS D'ESSAIS DES EQUIPEMENTS ELECTRIQUES (IECEE) METHODE CC

CB TEST CERTIFICATE — CERTIFICAT D'ESSAI CC

Product / Produit: Residual current operated circuit-breakers without integral over current protection (RCCBs)

Name and address of the applicant / Nom et adresse du demandeur: Shanghai Ebasee Electric Co., Ltd. No.18, Gutang Road, Pudong, Shanghai, 201209, P.R. China

Name and address of the manufacturer / Nom et adresse du fabricant: SASSIN International Electric Shanghai Co., Ltd. No.2388, Jinhai Road, Pudong, Shanghai, 201209, P.R. China

Name and address of the factory / Nom et adresse de l'usine: SASSIN International Electric Shanghai Co., Ltd. No.2388, Jinhai Road, Pudong, Shanghai, 201209, P.R. China

Ratings and principal characteristics / Valeurs nominales et caractéristiques principales: 2Pole&F, 230V~/400V~; In: 16A, 25A, 40A, 63A; Sensitivity: 30mA (General type); 10mA, 100mA (S-type); Type A or Type AC; without time-delay (General type) or with time-delay (Type S)

Trademark (if any) / Marque de fabrique (si elle existe): EBASEE

Type of Manufacturer's Testing Laboratories used / Type de programme du laboratoire d'essais constructeur: ---

Model / Type Ref. / Ref. De type: ebsx6

Additional information (if necessary may also be reported on page 2) / Informations complémentaires (si nécessaires, peuvent être indiquées sur la 2ème page): ---

A sample of the product was tested and found to be in conformity with / Un échantillon de ce produit a été essayé et a été constaté conforme à la: IEC 61008-1:2010 ed.1) IEC 61008-2-1:1990(ed.1)

As shown in the Test Report Ref. No. which forms part of this Certificate / Comme indiqué dans le Rapport d'essais numéro de référence qui constitue partie de ce Certificat: IC13982

This CB Test Certificate is issued by the National Certification Body / Ce Certificat d'essai CC est délivré par l'Organisme National de Certification

TÜVRheinland®

TÜV Rheinland InterCert Kft., Dózsa György út 26, H-1132 Budapest, Vág u. 48/A-B, www.tuv.hu

Date: 2013-08-06 Signature: Laszlo Bakos

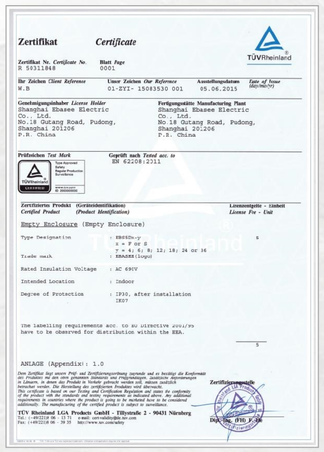
Zertifikat / Certificate — TÜVRheinland

Zertifikat Nr. / Certificate No.: R 50311848
Blatt / Page: 0001
Ihr Zeichen / Client Reference: W.B
Unser Zeichen / Our Reference: 01-ZTI- 15083530 001
Ausstellungsdatum / Date of Issue (dd/mm/yy): 05.06.2013

Genehmigungsinhaber / License Holder: Shanghai Ebasee Electric Co., Ltd. No.18 Gutang Road, Pudong, Shanghai 201206 P.R. China

Fertigungsstätte / Manufacturing Plant: Shanghai Ebasee Electric Co., Ltd. No.18 Gutang Road, Pudong, Shanghai 201206 P.R. China

Prüfzeichen / Test Mark: TÜVRheinland Geprüfte Sicherheit / Tested Safety / Contrôle Sécurité

Geprüft nach / Tested acc. to: EN 62208:2011

Zertifiziertes Produkt (Geräteidentifikation) / Certified Product (Product Identification): Empty Enclosure (Empty Enclosure)

Lieferumfang – Einheit / License Fee – Unit: 5

Type Designation: EBS63c-y
s = F or S
y = 4; 6; 8; 12; 18; 24 or 36

Trade mark: EBASEE (logo)

Rated Insulation Voltage: AC 690V

Intended Location: Indoor

Degree of Protection: IP30, after installation IE07

The labelling requirements acc. to EU directive 2001/95 have to be observed for distribution within the EEA.

ANLAGE (Appendix): 1.0

Zertifizierungsstelle

TÜV Rheinland LGA Products GmbH - Tillystraße 2 - 90431 Nürnberg
Tel.: (+49)2128 08 - 13 73 e-mail: cert-info@de-tuv.com
Fax: (+49)2128 08 - 39 20 http://www.tuv.com/safety

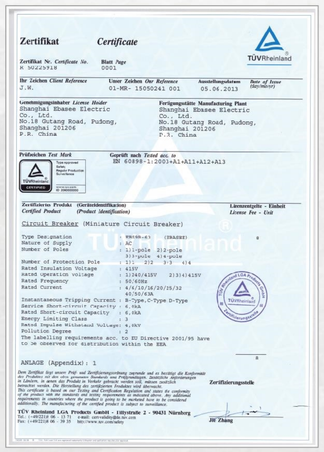
Zertifikat / Certificate — TÜVRheinland

Zertifikat Nr. / Certificate No.: R 50225918
Blatt / Page: 0001
Ihr Zeichen / Client Reference: J.W.
Unser Zeichen / Our Reference: 01-MK- 15050241 001
Ausstellungsdatum / Date of Issue (dd/mm/yy): 05.06.2013

Genehmigungsinhaber / License Holder: Shanghai Ebasee Electric Co., Ltd. No.18 Gutang Road, Pudong, Shanghai 201206 P.R. China

Fertigungsstätte / Manufacturing Plant: Shanghai Ebasee Electric Co., Ltd. No.18 Gutang Road, Pudong, Shanghai 201206 P.R. China

Prüfzeichen / Test Mark: TÜVRheinland Geprüfte Sicherheit / Tested Safety / Contrôle Sécurité

Geprüft nach / Tested acc. to: EN 60898-1:2003+A11+A12+A13

Zertifiziertes Produkt (Geräteidentifikation) / Certified Product (Product Identification): Circuit Breaker (Miniature Circuit Breaker)

Lieferumfang – Einheit / License Fee – Unit: 8

Type Designation: EBS63c-x (EBASEE)
Nature of Supply: AC
Number of Poles: 1;1|1-pole 2;2-pole 3;3|3-pole 4;4-pole
Number of Protection Pole: 1;1|1 2;2 3;3 4;4
Rated Insulation Voltage: 1;240/415V 3;3|4/415V
Rated Operation Voltage: 50/60Hz
Rated Frequency: 6;10;16;20;25;32;40;50;63A
Rated Current: 3
Instantaneous Tripping Current: B-Type,C-Type D-Type
Service Short-circuit Capacity: 6.0kA
Rated Short-circuit Capacity: 6.0kA
Energy Limiting Class: 3
Rated Impulse Withstand Voltage: 4.0kV
Pollution Degree: 2
The labelling requirements acc. to EU Directive 2001/95 have to be observed for distribution within the EEA.

ANLAGE (Appendix): 1

Zertifizierungsstelle

TÜV Rheinland LGA Products GmbH - Tillystraße 2 - 90431 Nürnberg
Tel.: (+49)2128 08 - 13 73 e-mail: cert-info@de-tuv.com
Fax: (+49)2128 08 - 39 20 http://www.tuv.com/safety

Jie Zhang

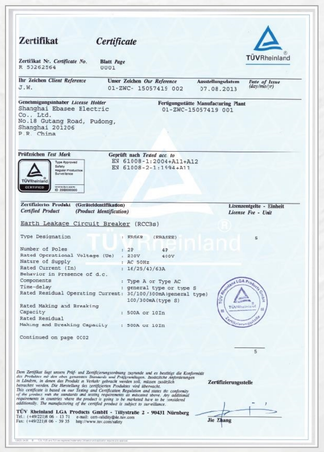
Zertifikat / Certificate — TÜVRheinland

Zertifikat Nr. / Certificate No.: R 50262564
Blatt / Page: 0001
Ihr Zeichen / Client Reference: J.W.
Unser Zeichen / Our Reference: 01-ZMC- 15057415 002
Ausstellungsdatum / Date of Issue (dd/mm/yy): 27.06.2013

Genehmigungsinhaber / License Holder: Shanghai Ebasee Electric Co., Ltd. No.18 Gutang Road, Pudong, Shanghai 201206 P.R. China

Fertigungsstätte / Manufacturing Plant: Shanghai Ebasee Electric Co., Ltd. No.18 Gutang Road, Pudong, Shanghai 201206 P.R. China

Prüfzeichen / Test Mark: TÜVRheinland Geprüfte Sicherheit / Tested Safety / Contrôle Sécurité

Geprüft nach / Tested acc. to: EN 61008-1:2004+A11+A12 EN 61008-2-1:1994+A11

Zertifiziertes Produkt (Geräteidentifikation) / Certified Product (Product Identification): Earth Leakage Circuit Breaker (RCCBs)

Lieferumfang – Einheit / License Fee – Unit: 5

Type Designation: EBs6x (EBASEE)
Number of Poles: 2P 4P
Rated Operating Voltage (Ue): 230V 400V
Nature of Supply: AC 50Hz
Rated Current (In): 16;25;40;63A
Behavior in Presence of d.c. Components: Type A or Type AC
Time-Delay: general type or type S
Rated Residual Operating Current: 10;100;300mA(general type) 100;300mA(type S)
Rated Making and Breaking Capacity: 500A or 10In
Rated Residual Making and Breaking Capacity: 500A or 10In

Continued on page 0002

Zertifizierungsstelle

TÜV Rheinland LGA Products GmbH - Tillystraße 2 - 90431 Nürnberg
Tel.: (+49)2128 08 - 13 73 e-mail: cert-info@de-tuv.com
Fax: (+49)2128 08 - 39 20 http://www.tuv.com/safety

Jie Zhang

1.Function

EBS5CH series mini contactor mainly apply to the condition of 50Hz (or 60Hz) , 400V or less rated operation voltage, 100A or less rated current under AC-7a application, or, 32A or less rated current under AC-7b application, 6kA or less rated breaking current, which is to control the household appliances, low or micro inductive reactance load, or household motor load as well.
Its main performance indices comply with IEC 61095.

2.Nomenclature

EBS 5CH - 100

- 100 — Frame level
- 5CH — Design code
- EBS — Company code

3.Specifications

Design code	Width (multiples of 9mm)	Contact quantity	Usage type	Rated insulation voltage	Rated working voltage	Control voltage	Rated working current	Control power
EBS5CH-16/M	2	10, 01, 11, 20, 02	AC-7a	500V	250V	220/240V AC 50Hz	16/6	2.8/1
EBS5CH-20/M							20/7	4/1.2
EBS5CH-25/M							25/8.5	5.4/1.5
EBS5CH-16/M	4	30, 21, 12, 03, 40 31, 22, 13, 04			400V		16/6	2.8/1
EBS5CH-20/M							20/7	4/1.2
EBS5CH-25/M							25/8.5	5.4/1.5
EBS5CH-32/M	4	10, 01, 11, 20, 02			250V		32/12	6.5/1.9
EBS5CH-40/M							40/15	8.4/2.4
EBS5CH-63/M							63/25	13/3.8
EBS5CH-32/M	6	30, 21, 12, 03, 40 31, 22, 13, 04			400V		32/12	6.5/1.9
EBS5CH-40/M							40/15	8.4/2.4
EBS5CH-63/M							63/25	13/3.8
EBS5CH -100/M	6	10, 01, 11, 20, 02			250V		100/40	13/3.8
EBS5CH -100/M	12	30, 21, 12, 03, 40 31, 22, 13, 04			400V		100/40	26/7.6

4.Normal Working Environment and Installation Conditions

- Ambient air temperature: -5°C~+40°C, average temperature less than +35°C within 24 hours;Altitude: less than 2000 meters.
- Air conditions: the air relative humidity of the installation place is less than 50% at the maximum temperature +40°C; a high relative humidity is allowed at the low temperature, such as 90% humidity at +20°C, special measures should be taken when coagulating frost happened occasionally because of temperature change.
- Transportation and storage temperature: -25°C~+55°C, it can approach to +70°C in a short time (within 24 hours).
- Pollution grade: 2
- Products should be installed vertically, the gradient is less than ±5°between the installation surface and the vertical surface.
- Operation condition: when the ambient air temperature is within -5°C~+40°C, add rated control supply voltage Us to the contactor coil, making it fever to a stable state, and the contactor will connect when it is in 85%~110% of the rated control supply voltage, disconnect in 20%~75% of the rated control supply voltage.
- Mechanical life: ≥ 1 million times.
  Electrical life: ≥ 10 thousand times.

5.Dimensions

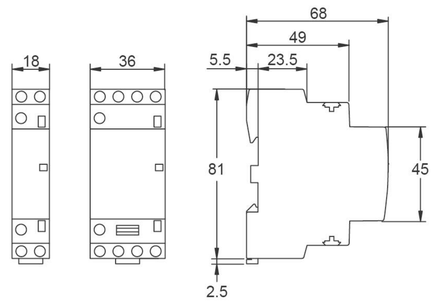

EBS5CH-16/25A

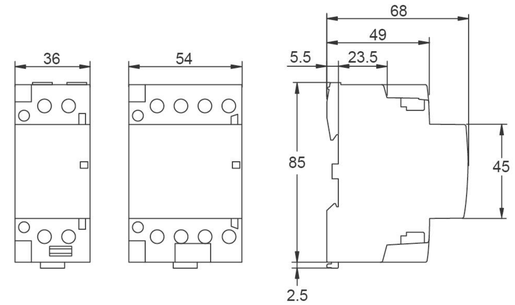

EBS5CH-40/63A

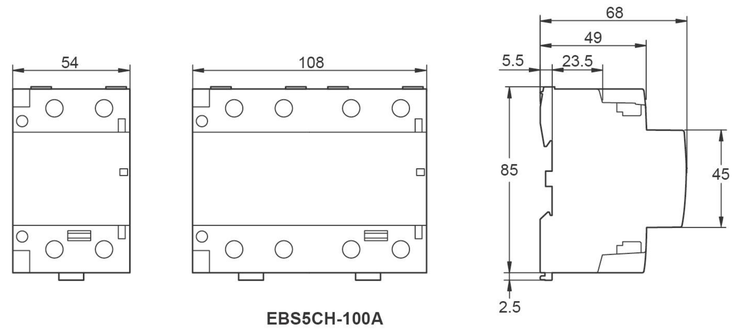

EBS5CH-100A

M

6.Manual Mini Contactor

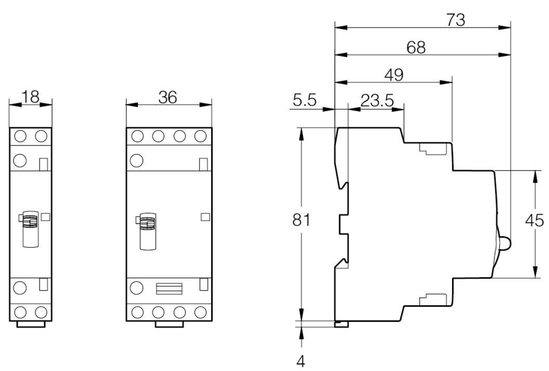

Manual EBS5CH-16/20/25A

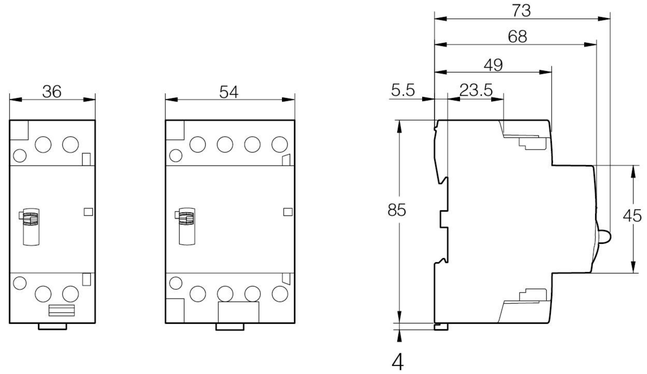

Manual EBS5CH-32/40/63A

7.Order Note

Following items should be marked when ordering	Ordering sample
Product name, model Rated current Main Contact type Coil specification	To order the EBS5CH, rated current is 40A, main 4NO, coil: 230V, 50Hz, should be marked: EBS5CH-100/40A 230V 50Hz.