Specifications and technical data are subject to change without notice.
Please contact to confirm relevant information on ordering.

No.18, Gutang Rd, Shanghai 201209, China
+86 21 5032 0898
+86 21 5032 0828
info@ebasee.com
www.ebasee.com

PHOTOVOLTAIC PRODUCT

Copy right reserved EBS.NO.2023004

EBASEE

Smart Living Green Ebasee

PHOTOVOLTAIC PRODUCT

COMPANY PROFILE

As a leading supplier in the low voltage electrical industry, Shanghai Ebasee Electric Co., Ltd. products have been used for residential, commercial and industrial applications. EBASEE brand is recognized for its quality and reliability in an ever-increasing number of markets worldwide. So far EBASEE products have been testified by international labs including BV, TUV, Intertek, with KEMA, CB, SEMKO, RoHS, CE, and CCC etc.

With qualified raw materials and components supply, all products are manufactured by EBASEE's defined international specifications. We have 4 semi-auto production lines, up-to-date quality control facilities, well-trained and experienced workers. Moreover, with a technical R & D team and fully equipped CNAS laboratory, EBASEE factory can carry out efficient new products development, daily production and QC.

EBASEE have a wide range of cooperations with world leading companies in new products development, OEM and ODM cooperation. Meanwhile, we process the idea of green and smart energy, working with universities such as Xi'an Jiao Tong University to get more intelligent and environmental-friendly electric solutions.

EBASEE focused on achieving growth through the success of worldwide partners. Guided by the philosophy of "customer-oriented", powered by the idea of "quick response and flexible supply", EBASEE support our worldwide partners to compete against established players, to deliver the most systematic and cost-effective products and service in the market.

"Smart Living, Green EBASEE"

01 Verified Custom Manufacturer

02 Supplier of Fortune 500 Companies

03 Registered Trademarks

Quality is our culture!

CERTIFICATE

EBASEE products have been approved by international labs including BV, TUV, Intertek CQC, with KEMA, CB, SEMKO, RoHS, CE, and CCCs etc.

D

1.General

MC4 connector is typically made from copper, with a tin plating to enhance their conductivity and corrosion resistance, it is specialized electrical connectors designed specifically for solar panels, inverters, DC combiner boxes, and other components in a photovoltaic (PV) system.
MC4 connectors have become the industry standard due to their reliability, weather resistance, compatibility, cost-effectiveness, and easy installation and maintenance.

1000V DC

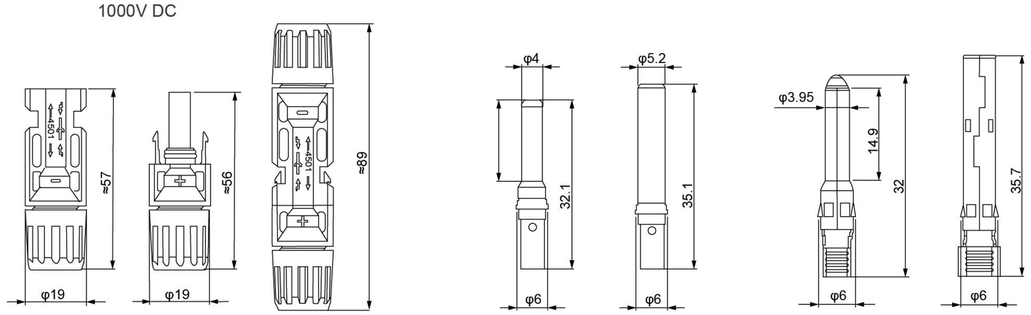

1500V DC

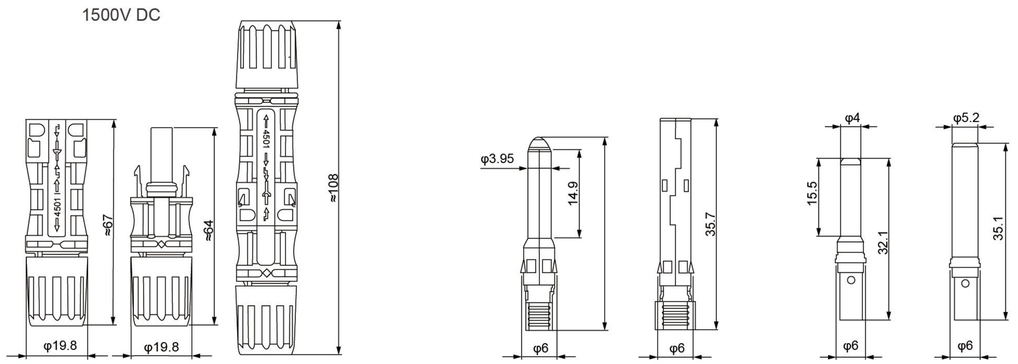

D

MC4-1 1000V DC

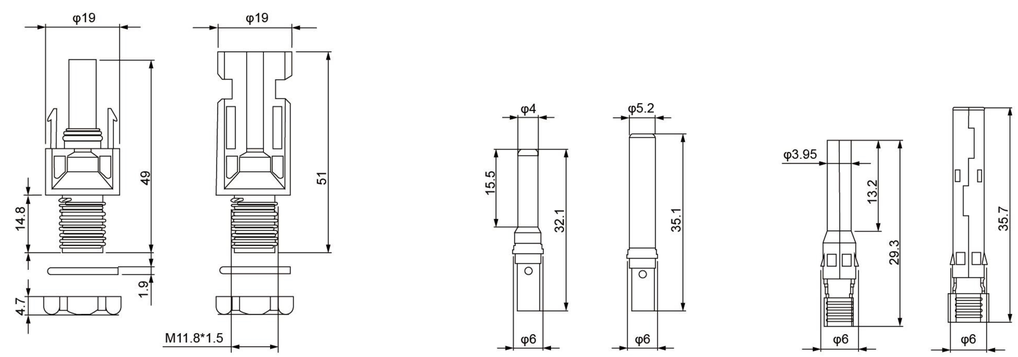

2.MC4 Specifications

Connector system	Φ4mm
Rated voltage	1000V/1500V DC
Rated current	17A(1.5mm²) 22A(2.5mm²,14AWG), 30A(4mm², 6mm², 12AWG, 10AWG)
Test voltage	6kV(50Hz, 1min)
Ambient temperature range	-40°C...+90°C(IEC) -40°C...+75°C(UL)
Upper limiting temperature	+105°C(IEC)
Degree of protection, mated	IP67
Unmated	IP2X
Comtact resistance of plug connectors	0.5mΩ
Safety class	Ⅱ
Contact material	Messing, verzinnt Copper Alloy, tin plated
Insulation material	PC/PPO
Locking system	Snap-in
Flame class	UL-90-V0
Sait mist spray test, degree of severity 5	IEC60068-2-52

PV-MC4-T2

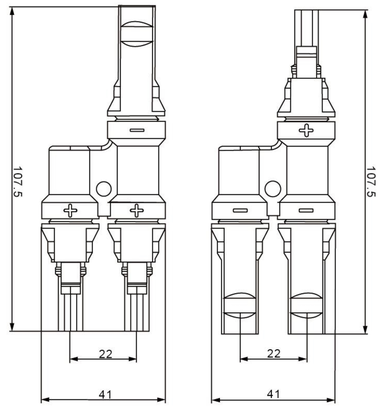

PV-MC4-T3

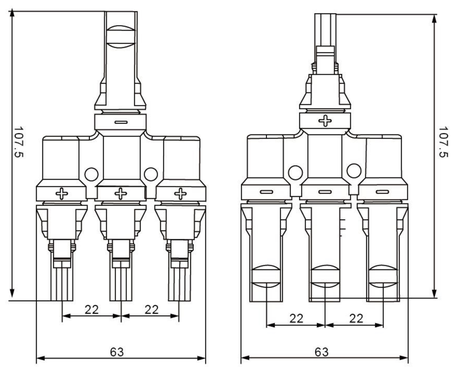

PV-MC4-T4

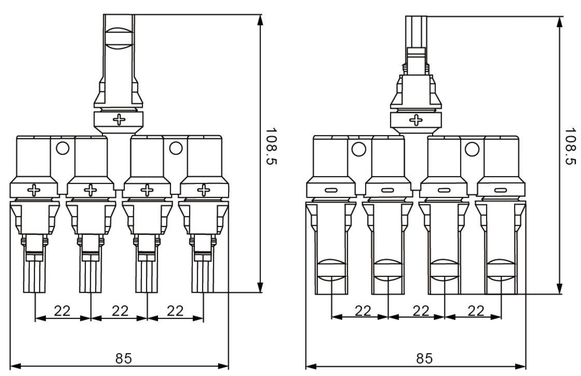

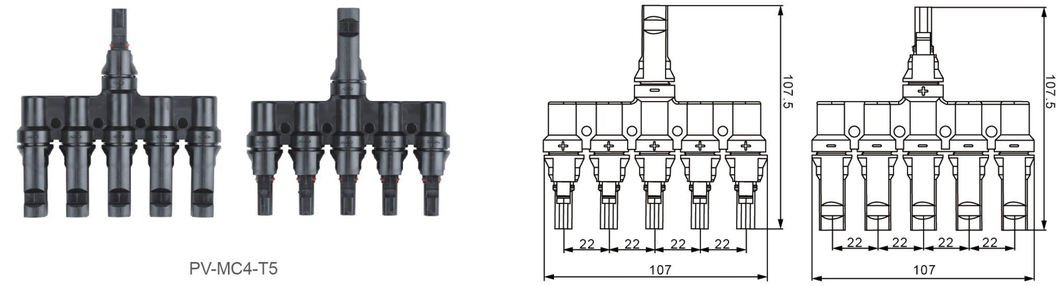

PV-MC4-T5

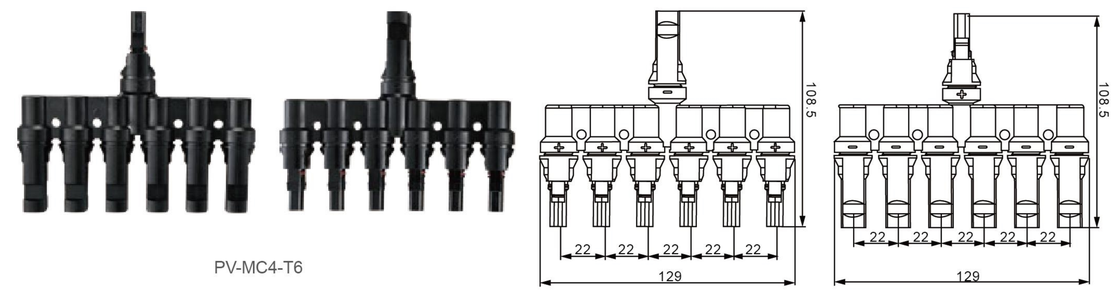

PV-MC4-T6

3.MC4-T Series Specifications

Insulation material	PPO
Contact material	Copper, Tin plated
Suitable current	30A
Rated voltage	1000VDC(TUV) 600VDC(UL)
Test voltage	6kV(TUV50Hz, 1min)
Contact resistance	<0.5mΩ
Degree of protection	IP67
Ambient temperature range	-40°C~+85°C
Flame class	UL94-V0
Safety class	Ⅱ
Pin dimensions	Φ4mm

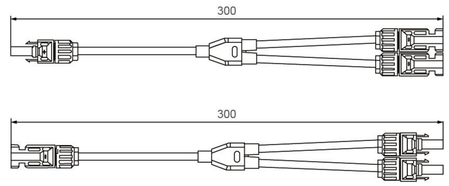

PV-MC4-Y2

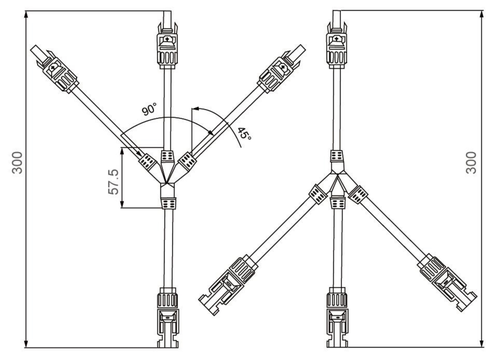

PV-MC4-Y3

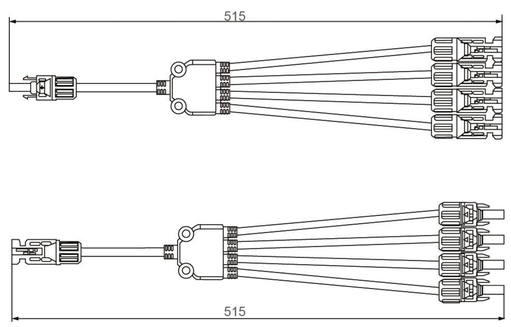

PV-MC4-Y4

4.MC4-Y Series Specifications

Connector system	Φ4mm
Rated voltage	1000V DC
Rated current	30A
Test voltage	6kV(50Hz, 1min)
Ambient temperature range	-40℃...+90℃(IEC) -40℃...+75℃(UL)
Upper limiting temperature	+105℃(IEC)
Degree of protection, mated	IP67
Unmated	IP2X
Comtact resistance of plug connectors	0.5mΩ
Safety class	Ⅱ
Contact material	Messing, verzinnt Copper Alloy, tin plated
Insulation material	PC/PA
Locking system	Snap-in
Flame class	UL-90-V0
Sait mist spray test, degree of severity 5	IEC60068-2-52

D

5.Solar Tools

Solar Tools Kit

EK1

EK2

The inner core of the connector can be placed in a small bag on the side.

Tow-set Spanners

1500V

ES1

1000V

ES2

1000V

ES3

D

Crimping tool

EP1

Suitable for crimping the cable of 2.5~6.0mm (AWG10-14)
Suitable for solar system installation site, flexible application.

EP2

Suitable for crimping the cable of 2.5~6.0mm (AWG10-14)
Suitable for solar system installation site, flexible application.

EP3

Suitable for crimping the cable of 2.5~6.0mm (AWG10-14)
Suitable for solar system installation site, flexible application.

D

EP4
Suitable for crimping the cable of 2.5~6.0mm (AWG10-14)
Suitable for solar system installation site, flexible application.

6.Order Note

Following items should be marked when ordering	Ordering sample
Product name, model Quantity	To order the Solar Panel Connectors PV-MC4-T2, quantity is 100 pieces, should be marked: Solar Panel Connectors PV-MC4-T2, 100 PCS.